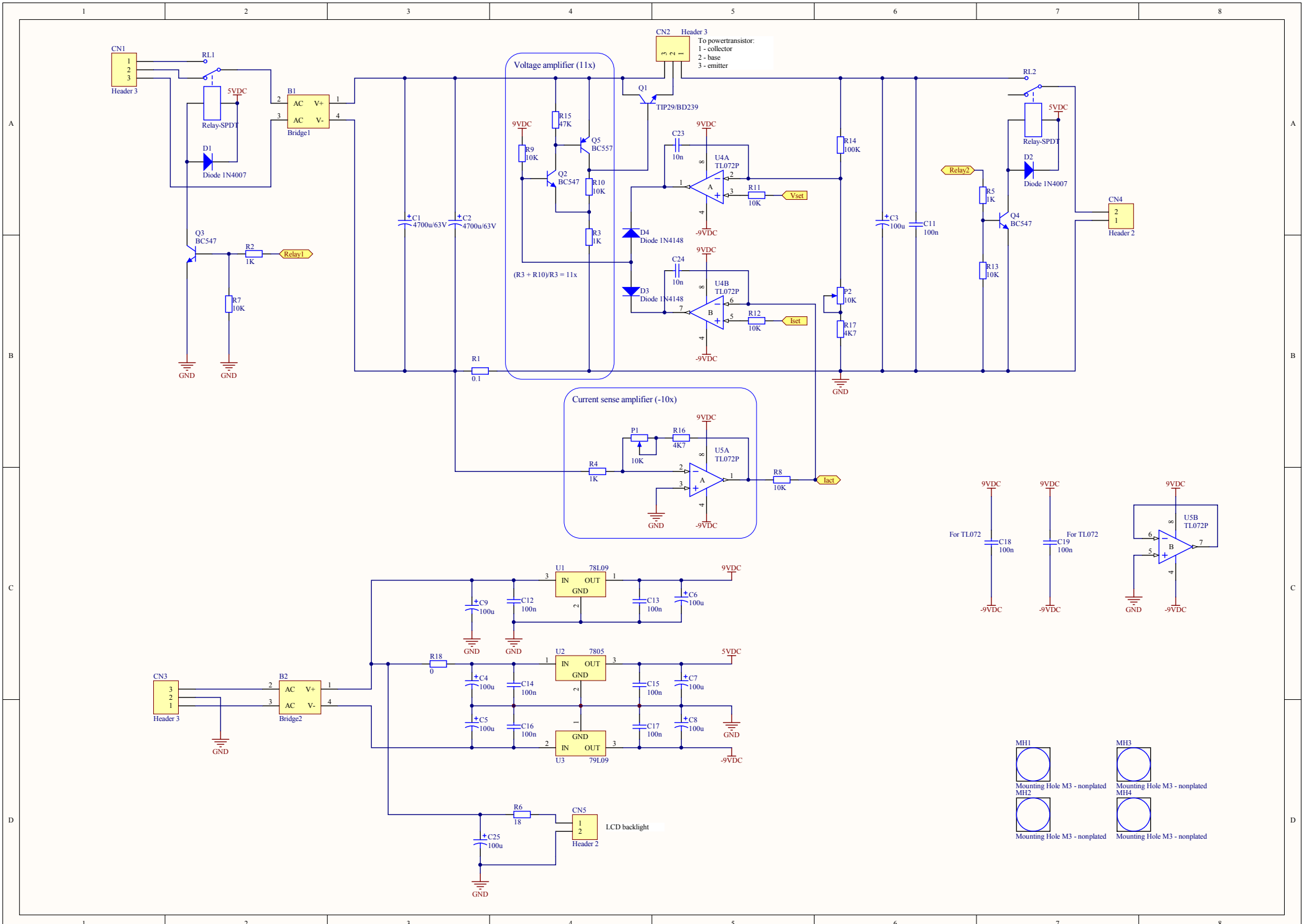
CN1
Header 3
RL1
Relay-SPDT
5VDC
D1
Diode 1N4007
B1
Bridge1
AC
V+
V-
Q3
BC547
R2
1K
Relay1
R7
10K
GND
C1
4700u/63V
C2
4700u/63V
R1
0.1
Voltage amplifier (11x)
R15
47K
Q5
BC557
9VDC
R9
10K
Q2
BC547
R10
10K
R3
1K
(R3 + R10)/R3 = 11x
CN2
Header 3
To powertransistor:
1 - collector
2 - base
3 - emitter
Q1
TIP29/BD239
C23
10n
U4A
TL072P
R11
10K
Vset
-9VDC
D4
Diode 1N4148
C24
10n
U4B
TL072P
R12
10K
Iset
D3
Diode 1N4148
R14
100K
P2
10K
R17
4K7
C3
100u
C11
100n
RL2
Relay-SPDT
D2
Diode 1N4007
Relay2
R5
1K
Q4
BC547
R13
10K
CN4
Header 2
Current sense amplifier (-10x)
P1
10K
R16
4K7
U5A
TL072P
R4
1K
R8
10K
Iact
For TL072
C18
100n
C19
100n
U5B
TL072P
U1
78L09
IN
OUT
C9
100u
C12
100n
C13
100n
C6
100u
U2
7805
R18
0
C4
100u
C14
100n
C15
100n
C7
100u
C5
100u
C16
100n
C17
100n
C8
100u
U3
79L09
CN3
Header 3
B2
Bridge2
R6
18
CN5
Header 2
LCD backlight
C25
100u
MH1
Mounting Hole M3 - nonplated
MH2
Mounting Hole M3 - nonplated
MH3
Mounting Hole M3 - nonplated
MH4
Mounting Hole M3 - nonplated